Tools Required:

- Medium Phillips screwdriver
- Medium Flathead screwdriver

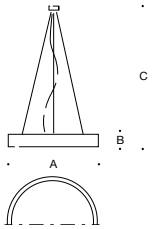

Dimensions

A: 53”

B: 7-7/8”

C: 157-1/2”

Overview:

LED Watts:	123.2W
System Watts:	144.0W
Controllability:	DALI-2 Controlled
Weight:	104.7 lbs.

Notice to Installer:

1. See page 3 for specific product safety warnings.
2. Mounts directly onto ceiling over standard recessed 4” octagonal wiring box (by others).
3. Select the desired interior finish by using appropriate code number as suffix.
   50 277.2 - Velvet black - Matte aluminum
   50 277.4 - Velvet black - Matte brass
   50 277.6 - Velvet black - Matte copper
4. LEDs are high-quality electronic components! Please avoid touching the light output opening of the LED directly during installation.
5. In order to avoid deformation under its own weight, do not place luminaire on its domed synthetic cover outside the package!
6. The luminaire may only be subjected to load when it is at rest - the steel wires are not suitable for any kind of moving dynamic load!

Installation: Pendant

1. Place luminaire shield with interior metal finish over luminare diffuser and housing and route suspension wires, electrical cable, and canopy up to the ceiling where recessed junction box is located. Collar will rest on luminaire housing.
2. Loosen fixing nut of the canopy and remove mounting plate from canopy. [*Figure* 1]
3. Steel safety wire fixed to the back of the mounting plate must be firmly secured to suitable structural building component. [*Figure* 2]
4. Lead electrical supply cable into recessed 4’’ octagonal wiring box.
5. Make connections from luminaire electrical cable to supply wiring:
   MAIN VOLTAGE SUPPLY WIRE TO BLACK DRIVER WIRE(S);
   NEUTRAL (COMMON SUPPLY WIRE TO WHITE DRIVER WIRE(S);
   GREEN GROUND WIRE TO GREEN DRIVER WIRE(S).
   DALI Control wiring:
   CONTROL WIRE (+) TO POSITIVE DRIVER DALI CONTROL WIRE
   CONTROL WIRE (-) TO NEGATIVE DRIVER DALI CONTROL WIRE
6. Attach mounting plate with suitable fixing hardware to the ceiling.
7. Hook the ends of the 4 steel wires into the recesses of the mounting plate making sure they are seated securely. [*Figure* 3]
8. Push the canopy onto the ceiling over mounting plate and screw tight to the mounting plate with the locking nut.

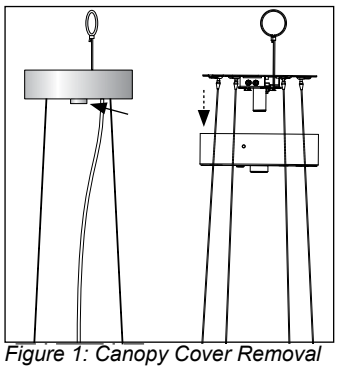

Figure 1: Canopy Cover Removal

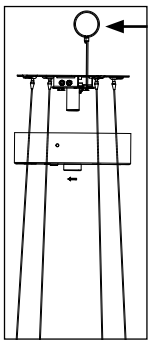

Figure 2: Safety Wire

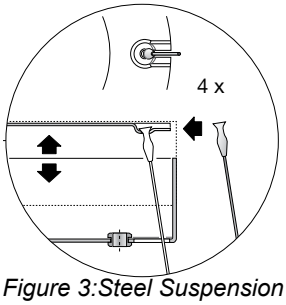

Figure 3:Steel Suspension Cables

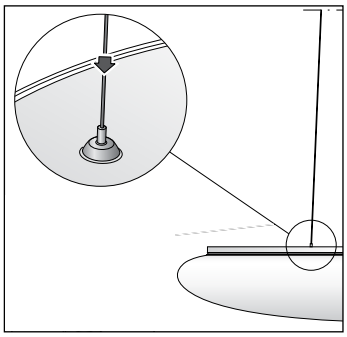

Figure 4:Cable Shortening

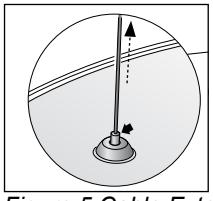

Figure 5:Cable Extension

Accessories

Please refer to the appropriate accessory installation sheet for further instruction when applicable.

Maintenance:

Clean regularly with solvent-free cleaner removing dust and debris.

Replacement Parts

See label inside of fixture for LED replacement part number.

Consult factory for all other replacement components.

 © copyright BEGA 2020
Due to the dynamic nature of lighting products and the associated technologies, luminaire data on this sheet is subject to change at the discretion of BEGA North America. For the most current technical data, please refer to bega-us.com

Tools Required:

- Medium Phillips screwdriver
- Medium Flathead screwdriver

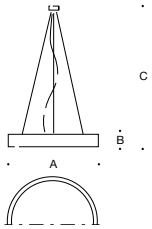

Dimensions

A: 53”

B: 7-7/8”

C: 157-1/2”

Overview:

LED Watts:	123.2W
System Watts:	144.0W
Controllability:	DALI-2 Controlled
Weight:	104.7 lbs.

Installation: Cable Shortening

1. Electrical cabling must be shortened on the canopy end. The steel suspension cables must only be shortened at the pendant end.
2. Disconnect the luminaire from supply power. Shorten electrical cable as necessary.
3. Push steel cable into the steel ball grip-lock connector located at the pendant side of the luminaire. [*Figure* 4]
4. If steel cable needs to be released from the connector push in the cylinder locking mechanism while pulling steel cable to release.
5. Steel cable requires at least 4in to secure properly into steel ball. Please consider these 4in if cutting the cable to the required length.
6. If steel cable needs to be cut, the end will need to be soldered in order to be reinserted into grip-lock connector.

WARNING:

FAILURE TO FOLLOW THESE INSTALLATION INSTRUCTIONS CAN CAUSE FIXTURE TO FAIL.

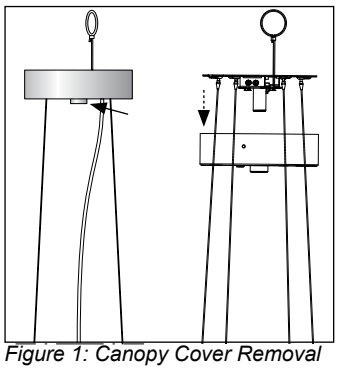

Figure 1: Canopy Cover Removal

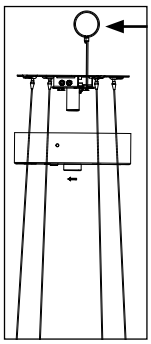

Figure 2: Safety Wire

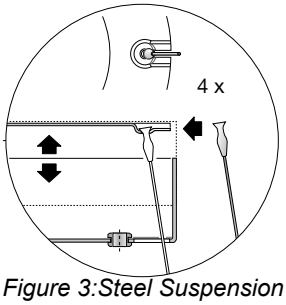

Figure 3:Steel Suspension Cables

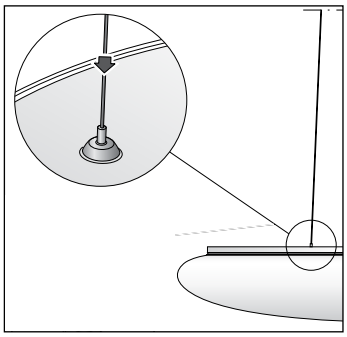

Figure 4:Cable Shortening

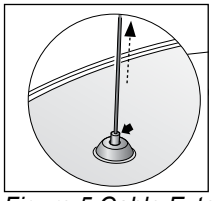

Figure 5:Cable Extension

Accessories

Please refer to the appropriate accessory installation sheet for further instruction when applicable.

Maintenance:

Clean regularly with solvent-free cleaner removing dust and debris

Replacement Parts

See label inside of fixture for LED replacement part number.

Consult factory for all other replacement components.

 © copyright BEGA 2020

Due to the dynamic nature of lighting products and the associated technologies, luminaire data on this sheet is subject to change at the discretion of BEGA North America. For the most current technical data, please refer to bega-us.com

Product Safety Warnings:

THIS PRODUCT MUST BE INSTALLED IN ACCORDANCE WITH THE APPLICABLE INSTALLATION CODE BY A PERSON FAMILIAR WITH THE CONSTRUCTION AND OPERATION OF THE PRODUCT AND THE HAZARDS INVOLVED.
SUITABLE FOR DAMP LOCATIONS.
MIN 90°C SUPPLY CONDUCTORS.

CE PRODUIT DOIT ÊTRE INSTALLÉ SELON LE CODE D'INSTALLATION PERTINENT, PAR UNE PERSONNE QUI CONNAÎT BIEN LE PRODUIT ET SON FONCTIONNEMENT AINSI QUE LES RISQUES INHÉRENTS.
CONVIENT AUX EMPLACEMENTS HUMIDE.

LES FILS D'ALIMENTATION 90°C MIN.

 © copyright BEGA 2020
Due to the dynamic nature of lighting products and the associated technologies, luminaire data on this sheet is subject to change at the discretion of BEGA North America. For the most current technical data, please refer to bega-us.com